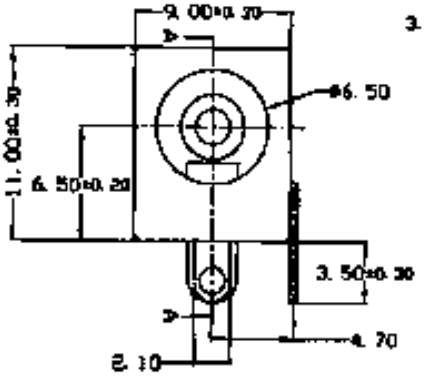

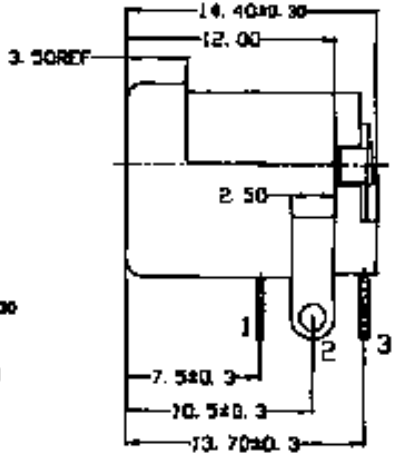

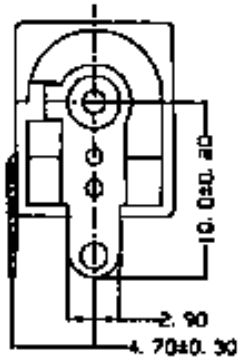

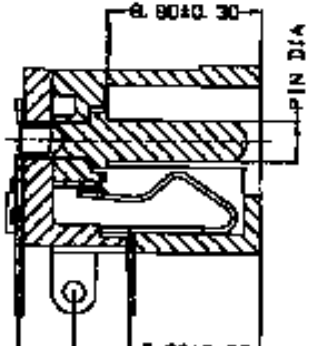

A-A' SECTION

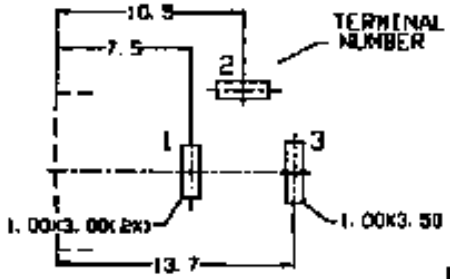

RECOMMENDED PCB LAYOUT
(BOTTOM VIEW)

UNLESS OTHERWISE SPECIFIED,
DIMENSIONS TOLERANCE ON DECIMALS ±0.1

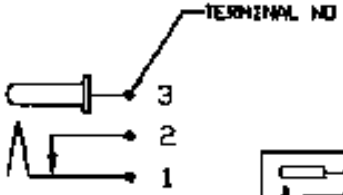

ELECTRICAL CIRCUIT

	PIN	TOLER.	PART
③	2.00	±0.05	AJ210A
②	2.45	±0.05	AJ210B
①			

⑨	AJ210-N4	CENTER PIN	COPPER ALLOY	[illegible]	1	[illegible]
⑧	AJ210-N3	PIN CONTACT	BRASS	TIN plating	1	4DT
⑦	AJ210-N2	SHUNT TERMINAL	BRASS	TIN plating	1	4DT
⑥	AJ210-N1	SPRING CONTACT	Phosphor Bronze	TIN plating	1	3DT
⑤	AJ210-P2	COVER	PBT		1	UL94V-0
④	AJ210-P1	HOUSING	PBT		1	UL94V-0
ITEM	PART NO.	NAME	MATERIAL	FINISH	Q'TY	NOTE

HO CHIEN

Gary	[illegible]	
Alan	920704	

AJ210

DC POWER JACK

A3 A AJ210X