HO CHIEN P/N. J5-25M-8C-02A

REVISION	DESCRECPTION	DATE	APPD
0	SET UP	JUL/10/2007	C.Y.LIN

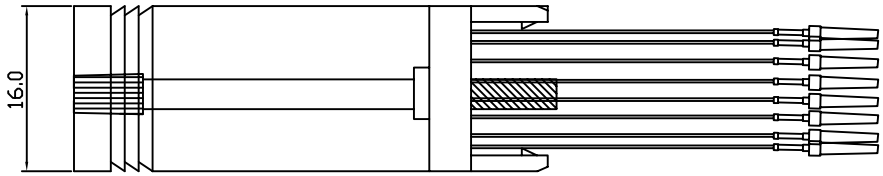

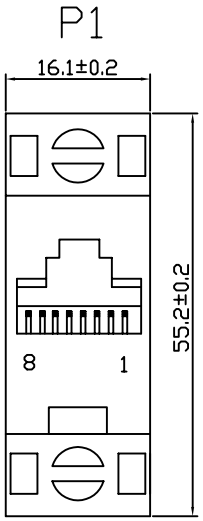

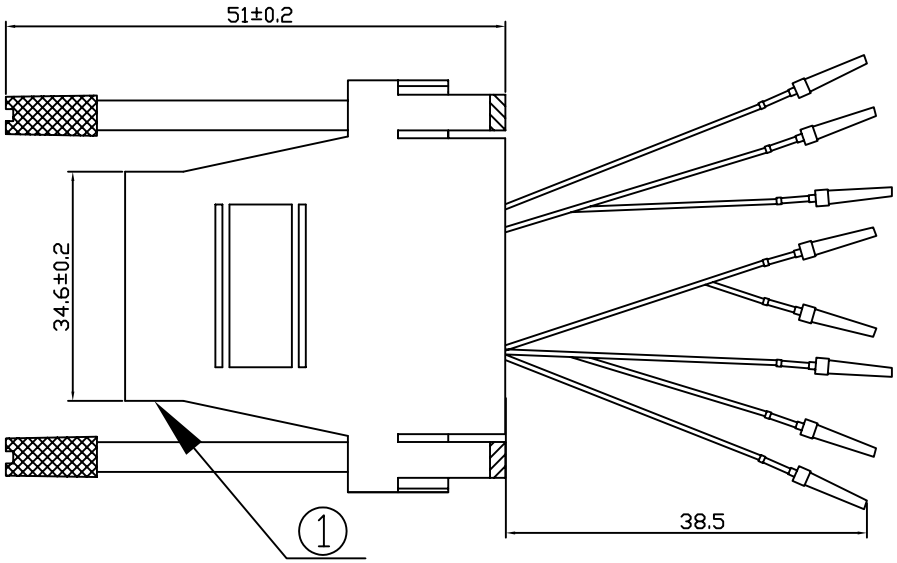

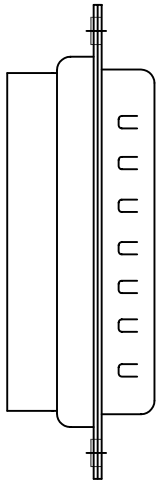

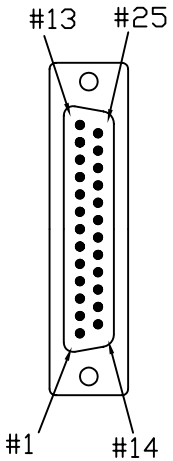

PIN ASSIGNMENT

P1

1	BLUE	T
2	ORANGE	T
3	BLACK	T
4	RED	T
5	GREEN	
6	YELLOW	T
7	BROWN	T
	BROWN	T
8	WHITE	T

NOTE:

1.DB頭直接放入PE袋中,不要插端子.

2.DB頭爲打端子式,指定灰色殼子.

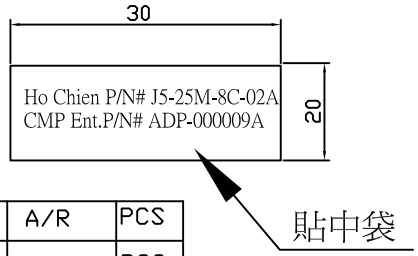

RoHS COMPLIANT

NO	PART NO,	DESCRIPTION	QTY	UNIT
*	390	CARTON:46*30*25CM	A/R	PCS
*	390	PE BAG:30"*28"*0.08MM	A/R	PCS
*	390	LABEL:"J5-25M-8C-02A"30*20MM	1/50	PCS
*	390	PE BAG:12"*14"*0.06MM	1/50	PCS
*	390	PE BAG:3"*6"*0.06MM	1	PCS
1	AAA000002046	RJ45 JACK-DB25M轉接頭 GRAY	1	SET

UNIT : mm

HO CHIEN ENTERPRISE CO. LTD

TITLE : CUSTOM ADAPTOR

DR : RON CHEN | CHK : J.T,CHEN | APPD : C.Y.LIN | PAGE: 1 OF 1 | HO CHIEN P/N. J5-25M-8C-02A

HO CHIEN ENTERPRISE CO., LTD. TEL: 886 - 2 - 29953505 FAX : 886 - 2 - 29953167 On - Line catalog : www.hochien.com EMAIL : hctw@ms64.hinet.net