—	——	EMPTY	A1,A2,A5 SHELL		
J9	SHELL	COAX. SHIELD	A3	SHELL	PLAY 2 OUT
	CENTER	COAX. COND		CENTER	
J8	SHELL	COAX. SHIELD	A4	SHELL	PLAY 1 OUT
	CENTER	COAX. COND		CENTER	
J11	SHELL	COAX. SHIELD	A6	SHELL	LOOP
	CENTER	COAX. COND		CENTER	
J10	SHELL	COAX. SHIELD	A7	SHELL	REF IN
	CENTER	COAX. COND		CENTER	
J7	SHELL	COAX. SHIELD	A8	SHELL	RECORD IN
	CENTER	COAX. COND		CENTER	
—	WIRE COLOR		J1		Label Decsription
PRO PANEL	WIRE CONNECTION TABLE				SIGNAL NAMES

REVISION HISTORY				
REV	DESCRIPTION	BY	DATE	APPROVED
A1	REVISED PRIOR TO RELEASE LENGTH INCREASED IDENTIFICATION LABELS ADDED	JLP	11/18/05	JLP
A	REVISED IAW ECO BU449	JLP	12/1/06	AL/JW/HC

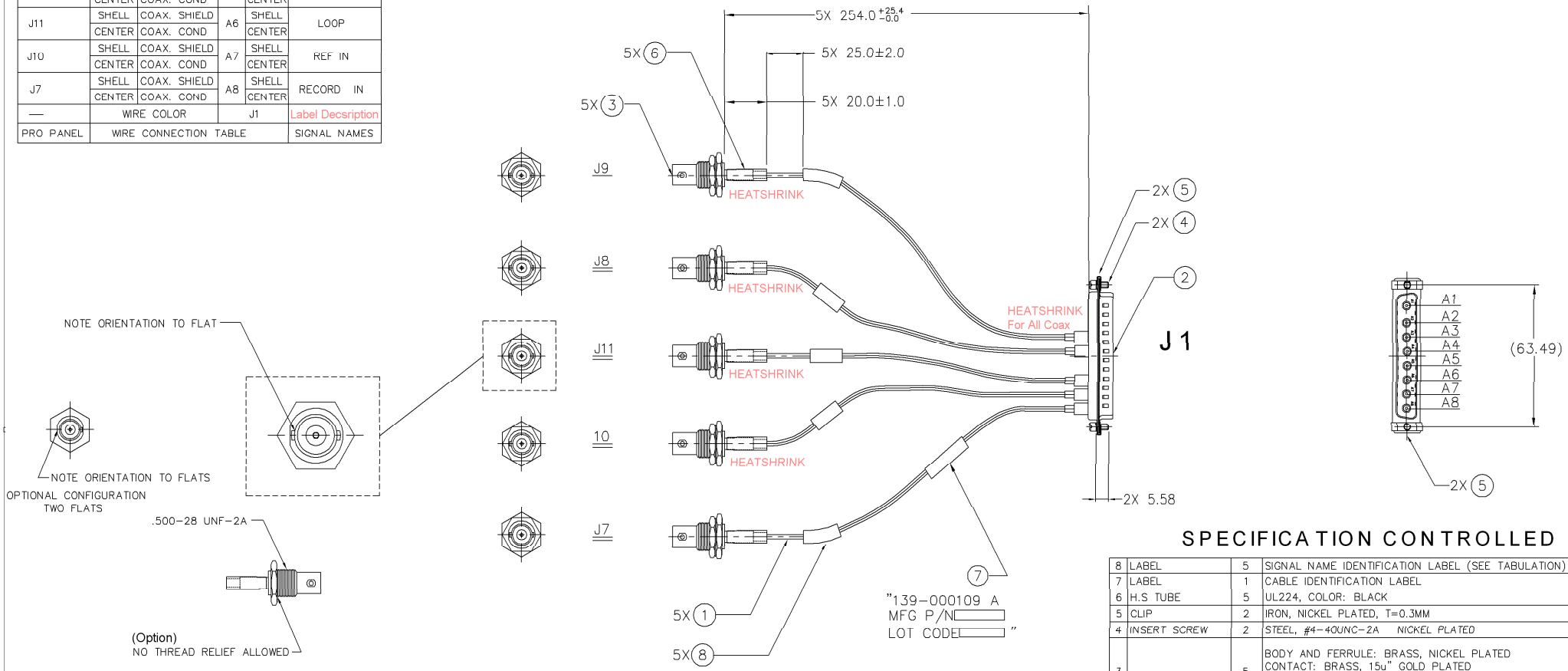

SPECIFICATION CONTROLLED

No.	ITEM	QTY	DESCRIPTION
8	LABEL	5	SIGNAL NAME IDENTIFICATION LABEL (SEE TABULATION)
7	LABEL	1	CABLE IDENTIFICATION LABEL
6	H.S TUBE	5	UL224, COLOR: BLACK
5	CLIP	2	IRON, NICKEL PLATED, T=0.3MM
4	INSERT SCREW	2	STEEL, #4-40UNC-2A NICKEL PLATED
3	FEMALE BULKHEAD BNC CONN.	5	BODY AND FERRULE: BRASS, NICKEL PLATED CONTACT: BRASS, 15u" GOLD PLATED INSULATOR: TEFLON; NUT: BRASS IMPEDANCE: 75Ω
2	MALE 8W8P CONN.	1	INSULATOR: PBT, COLOR: BLACK, UL94V-0 SHELL: STEEL, NICKEL PLATED CONTACT: BRASS, 15u" GOLD PLATED, IMPEDANCE: 75Ω FERRULE: BRASS, GOLD FLASH
1	CABLE	5	CABLE: RG179/U 75Ω 28-30 AWG JACKET: MIL-C-17 OD=2.55MM,

NOTES: UNLESS OTHERWISE SPECIFIED

1. ALL DIMENSIONS ARE "MM".
2. ANY OPEN, MISWIRING, SHORT AND INTERMITTENT ARE NOT PERMITTED
3. INSULATION RESISTANCE: 5M OHMS/300V DC MIN.
4. DRAWING MAY NOT BE REVISED WITHOUT PRIOR HARRIS APPROVAL
5. CABLE MIN BEND RADII TO BE 23.0MM
6. No gap on ferrule crimp to wire.
7. Min. pull test pass 20lbs for all BNC, RF connector.

RoHS

UNLESS OTHERWISE SPECIFIED DIMENSIONS ARE IN INCHES TOLERANCES ARE
.XXX +- .005
.XX +- .015 ANGULAR +- .1°
X +- .030
DO NOT SCALE DRAWING
MATERIAL
FINISH

APPROVALS	DATE
DRAWN J.PIDKOWICZ	FEB/28/06
ENGINEER D.OESTER	FEB/28/06
MFG	FEB/28/06
ENGR J.WATKINS	FEB/28/06
DESIGN APPROVAL H.CREVE	FEB/28/06

CABLE VIDEO 3 CHANNEL

HO CHIEN
www.hochien.com

PN# CA-B5042-0009A

SIZE E | PRJ NO. | DWG NO. 139 000109 | REV A
SCALE: | SHEET 1 OF 1