正式	開模	設變	估價	參考
●				

HISTORY X COUNT	DATE	ECN NO.	REV.	REVISION	SIGN.
1					

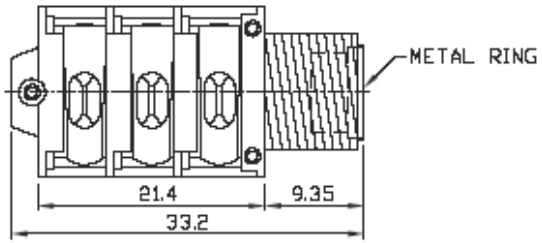

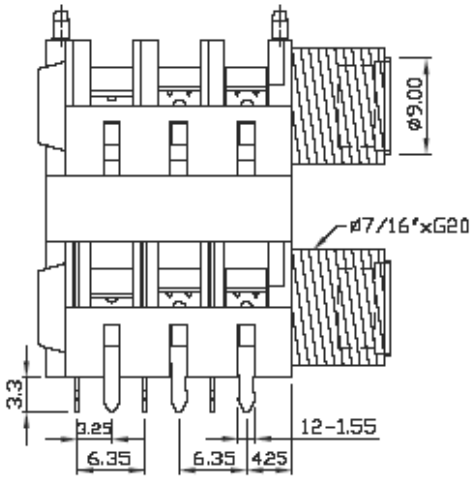

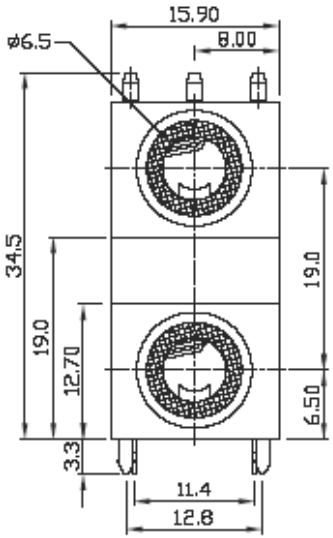

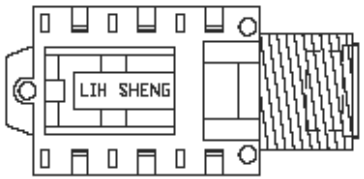

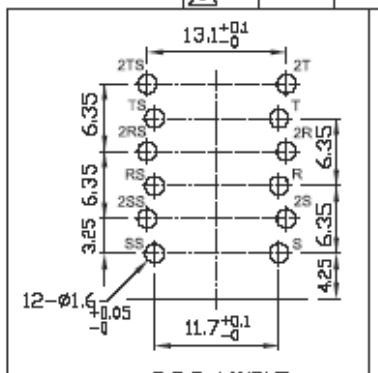

P.C.B LAYOUT
(TOP VIEW)(±0.1)

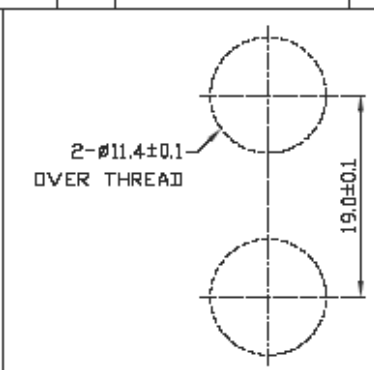

PANEL CUTOUT
DETAIL

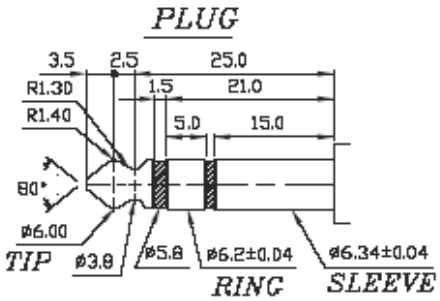

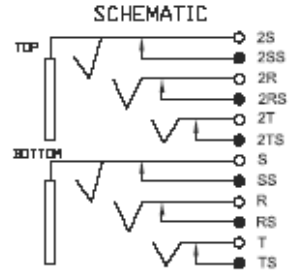

SWITCH CONTACTS OPEN WHEN PLUG IS INSERTED.CLOSE WHEN PLUG IS WITHDRAWN

NO	PART NAME	Q'TY	MATERIAL	PLATED	COLOR
7	CONTACT	3	C5191R-H	(Ni/Ag)	
6	CONTACT	3	C5191R-H	(Ni/Ag)	
5	BUSHING	2	BRASS	NICKEL	
4	HOUSING	2	PA66-G15		BLACK
3	COVER	1	PA66-G15		BLACK
2	TIP	6	C5191R-H	(Ni/Ag)	
1	SHUNT SPRING	6	C2680R-H	(Ni/Ag)	

HO CHIEN

www.hochien.com

TOLERANCE X. ±0.5	Material		PART NAME	6.4ø MINI PHONE JACK	
X.X ±0.3	Thickness		PART NO.	LJB0669BL-12	
X.XX ±0.15	Disposal		DATE	01/10/07'	REV: A
	UNIT	SCALE	DRAW	CHECK	APPROVE
	mm	2:1	Chris	Ken	Cooper