REVISIONS				
ZONE	REV.	DESCRIPTION	DATE	APPROVED
C3	02	INCREASED WAFER THICKNESS TO 3.0 mm	2013.02.18	
D3	02	REDUCED TERMINAL OVERALL LENGTH	2013.02.18	
D4	02	REDUCED TERMINAL MATE LENGTH	2013.02.18	
D8	02	ADDED CENTER SLOT	2013.02.18	
F7	03	ADDED DETAIL A FOR COINING INFO	2013.02.26	
E7	03	ADDED DETAIL B FOR COINING INGO	2013.03.26	
C7	03	ADDED CAVITY NUMBER REQUIREMENT	2013.02.26	
D6	03	REMOVED CENTER SLOT	2013.02.26	

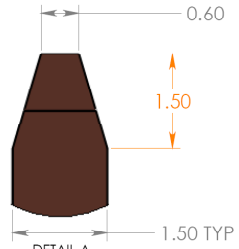

DETAIL A
SCALE 16 : 1 (03)

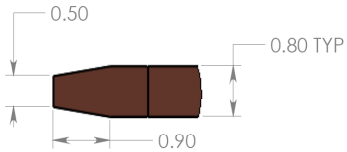

DETAIL B
SCALE 16 : 1 (03)

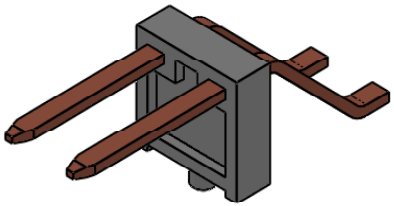

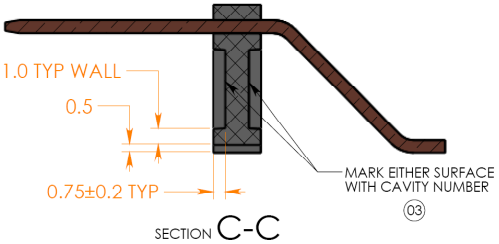

SECTION C-C

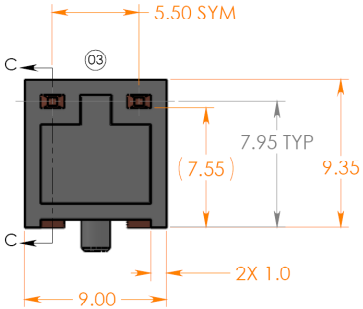

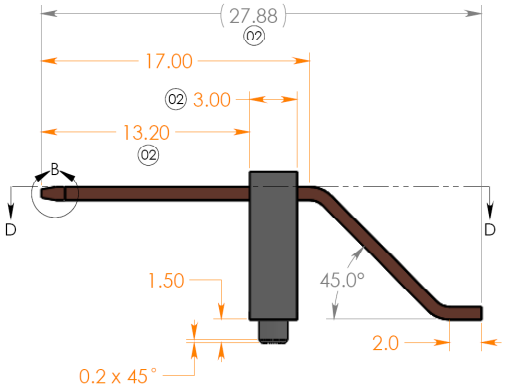

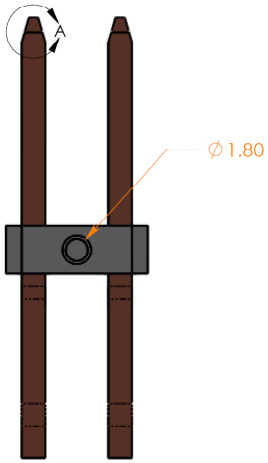

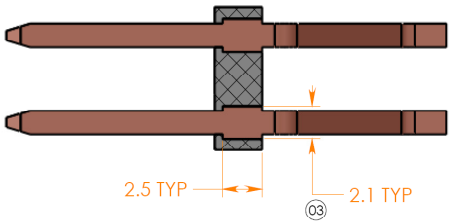

SECTION D-D

NOTES:

1. MATERIAL
   - INSULATOR: LCP, UL94V-0, BLACK
     -MASS: 0.23 g
   - TERMINAL: PHOSPHOR BRONZE
     -MASS: 0.33 g EACH
2. PLATING
   - 0.8 - 2.0 µm Sn OVER 0.3 - 1.0 µm Ni

REV.	DATE	BY	CK
03	2013.02.26	NXXXX	C1	XX
02	2013.02.18	NXXXX	C1	XX
01	2013.01.14	NXXXX	C1	XX

MATERIAL: SEE NOTES
FINISH: SEE NOTES

APPROVALS	DATE
DRAWN BY: C. Ice	2013.01.14
CHECKED BY: -	-

DIMENSIONS ARE IN MM
UNLESS OTHERWISE SPECIFIED
TOLERANCES ARE:
X.X = ± 0.2 MM
X.XX = ± 0.1 MM
X.XXX = ± 0.05 MM
X° = ± 1.0°

DO NOT SCALE PRINT

THIRD ANGLE PROJECTION

HO CHIEN
www.hochien.com

PN# CM-B1010-0001

SIZE: C
SCALE: 4:1
SHEET 1 OF 1

TITLE: Header, 2-way, 0.6 mm X 1.5 mm
REV: 03
PART NO: 5892133
DRAWING NO: 589213303